NS SELF PRIMING PUMP

NS series Self – priming pumps can be used for handling water or similar liquids at temperature below 80℃ and are suitable for lifting shallow ground water or surface water for the purpose of agricultural irrigation and sprinkling, water supply and discharge for factories mines residential areas and sewage discharge.

As there is no foot valve, it should be filled up with water before the first time starting. Water will be soon delivered once atarted and hence it is by no means necessary to fill the pump again after first running. NS pump adopting open type impeller and could be driven by motor, petrol engine and diesel engine through belt.

Technical Data

Model	Max. Flow Rate (m3/h)	Max. Head (m)	Speed (r/min)	Power (kw/hp)	Inlet (mm/inch)	Selfpriming Head (m)
NS-50	24	13	1450	1.5/2.0	50/2	5-6
NS-80	60	14		3/4	80/3	
NS-100	86	16		4/6	100/4	
NS-125	95	15		5.5/8.0	125/5	
NS-150	150	16.5		7.5/10	150/6	

Model	Max. Flow Rate (m3/h)	Max. Head (m)	Speed (r/min)	Power (kw/hp)	Inlet (mm/inch)	Selfpriming Head (m)
NS-50	35	25	2200	3/4	50/2	5-6
NS-80	85	30		4/6	80/3	
NS-100	115	32		7.5/10	100/4	
NS-125	140	30		8.5/12	125/5	
NS-150	200	32		22/30	150/6	

Model	Max. Flow Rate (m3/h)	Max. Head (m)	Speed (r/min)	Power (kw/hp)	Inlet (mm/inch)	Selfpriming Head (m)
NS-50	40	32	2600	4/6	50/2	5-6
NS-80	100	34		7.5/10	80/3	
NS-100	130	38		11/16	100/4	
NS-125	150	35		15/20	125/5	

Model	Max. Flow Rate (m3/h)	Max. Head (m)	Speed (r/min)	Power (kw/hp)	Inlet (mm/inch)	Selfpriming Head (m)
NS-50	45	38	2900	5.5/8	50/2	5-6
NS-80	138	40		11/16	80/3	

NS Pump's Construction:

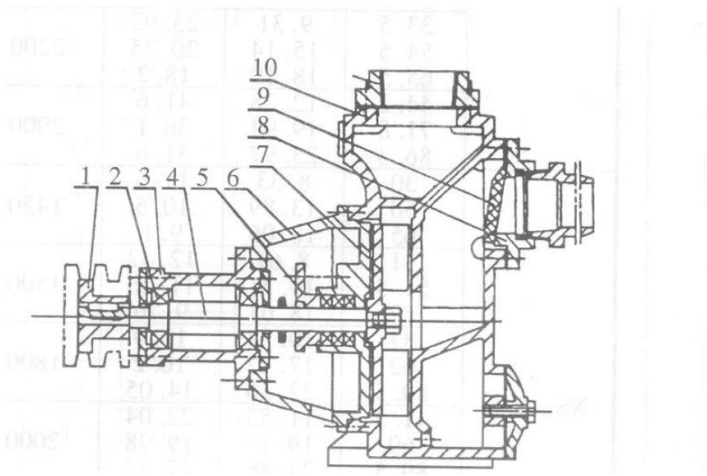

1. Coupling or pully
2. Bearing
3. Bearing
4. Shaft
5. Gland
6. Casing Cover
7. Impeller
8. Inlet
9. Flap Valve
10. Body

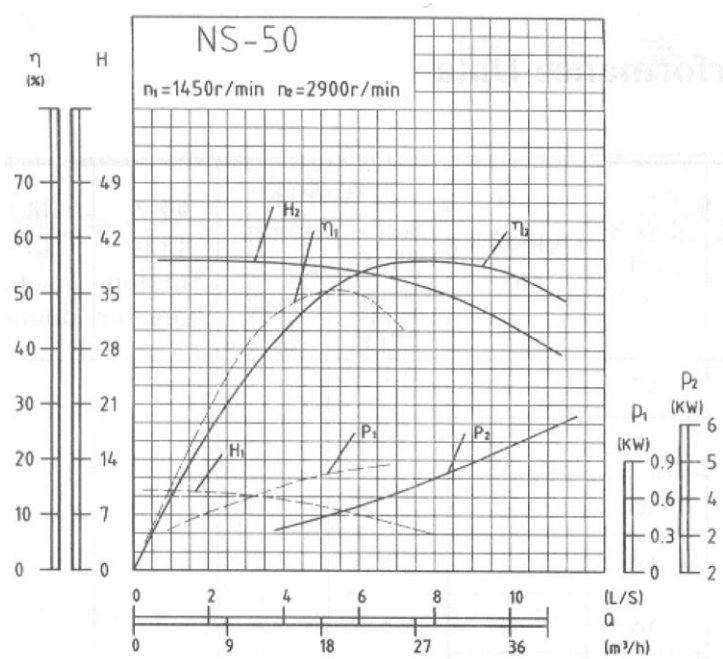

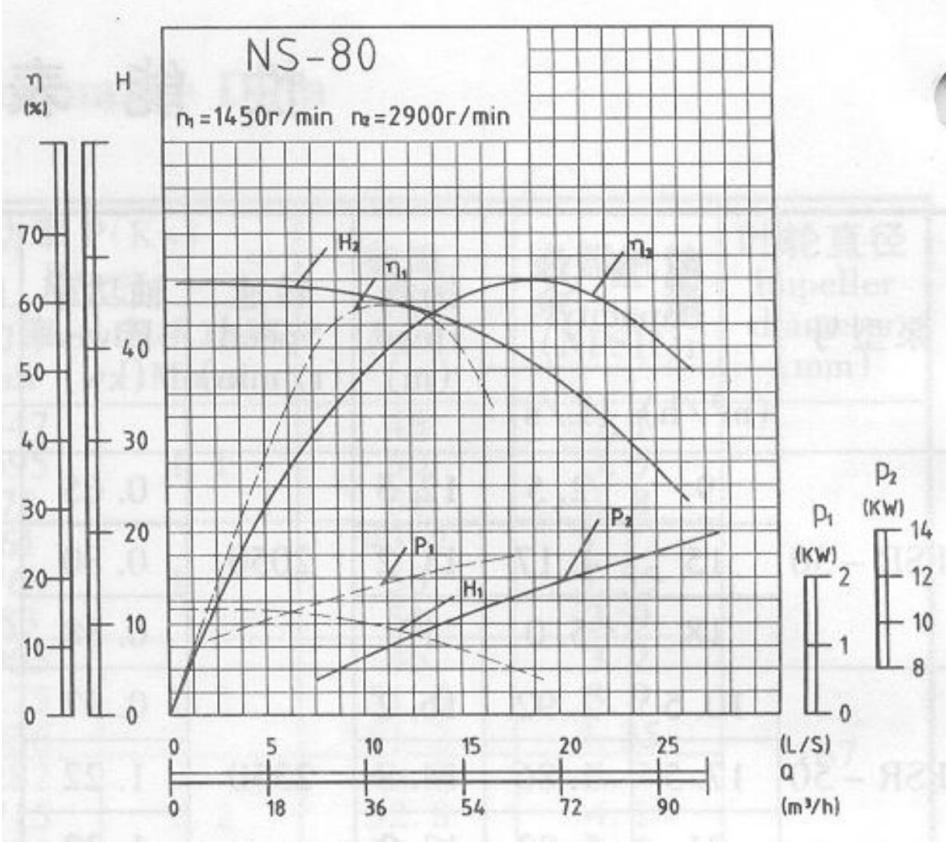
NS-80
n1=1450r/min n2=2900r/min
η (%)
H
H2
η1
η2
P1
P2
H1
P1 (KW)
P2 (KW)
Q (L/S)
Q (m³/h)

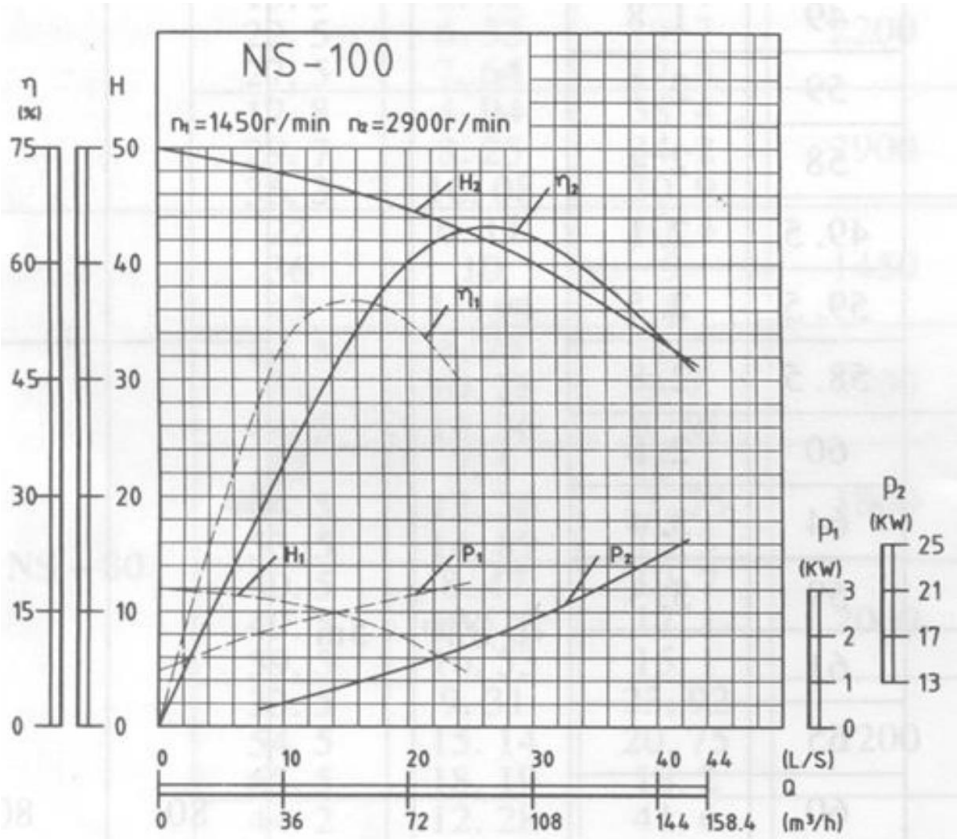
NS-100
n1=1450r/min n2=2900r/min
η (%)
H
H2
η2
η1
H1
P1
P2
P1 (KW)
P2 (KW)
Q (L/S)
Q (m³/h)

NS 型泵外形和安装尺寸图　The Overall & dimansions chart

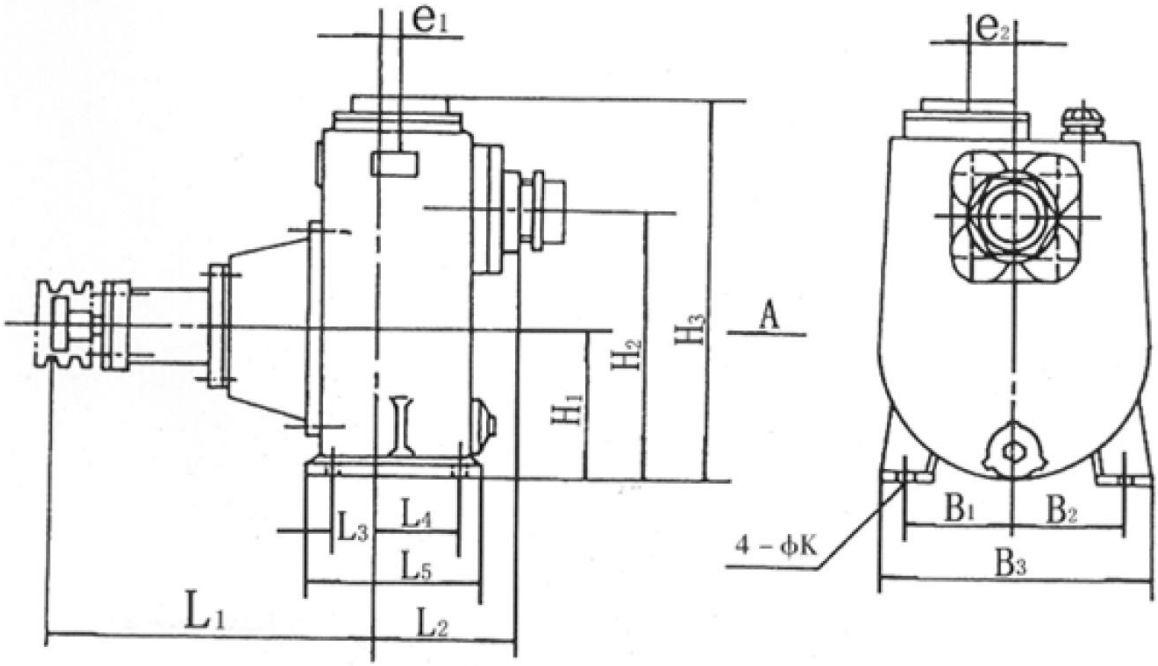

NS 型泵外形和安装尺寸表　Table of overall & chart dimansions

泵型号	外形和安装尺寸													
	L_1	L_2	L_3	L_4	L_5	H_1	H_2	H_3	e_1	e_2	B_1	B_2	B_3	K
NS - 50	270	114	36	54	123	126	227	334	11	50	110	95	235	11.5
NS - 80	286	128	38	72	142	140	260	394	18	50	125	105	270	13.5
NS - 100	297	148	44.5	80.5	161	150	275	431	21	46	135	115	280	14.2